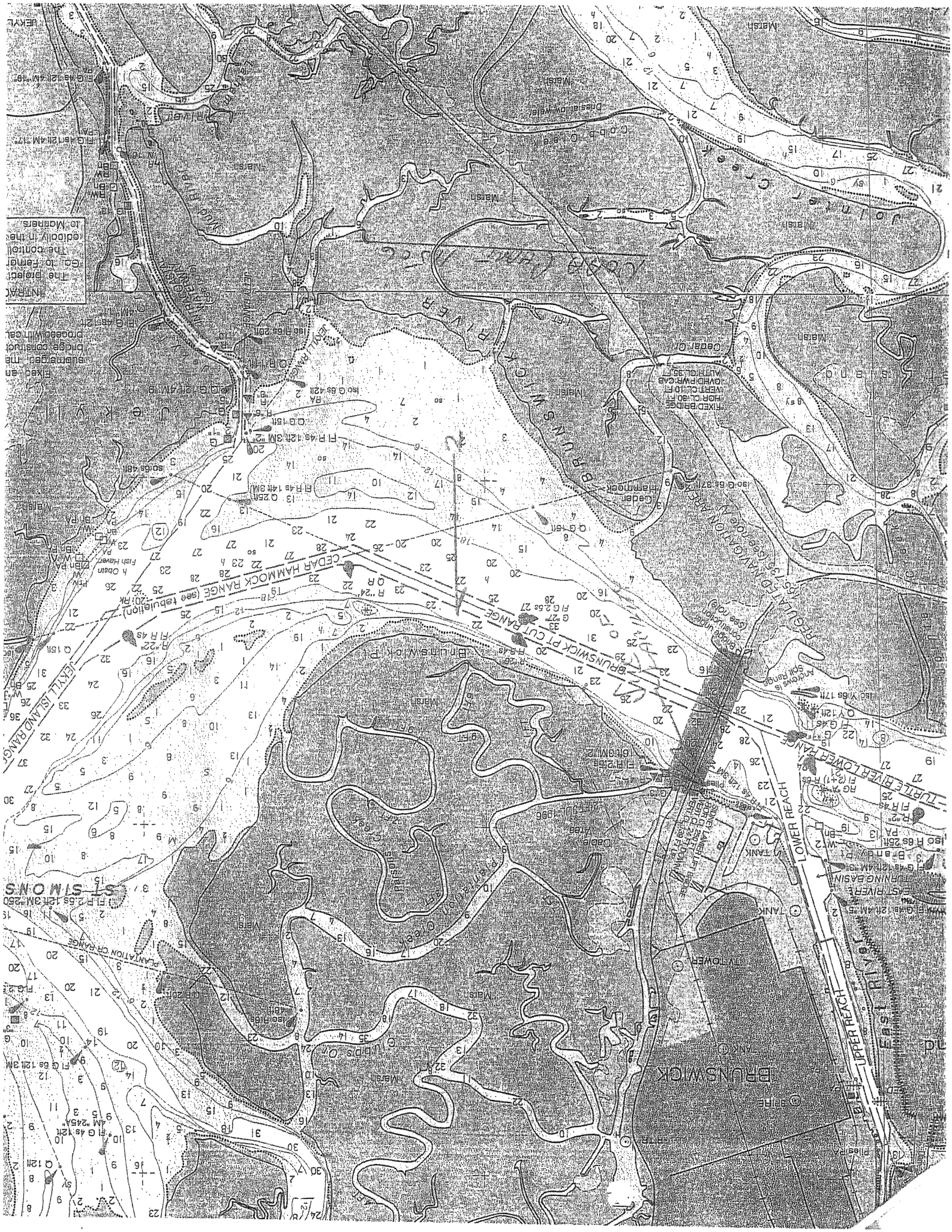

Jointer Creek
Cobb Creek
Cedar Cr
Cedar Hammock
BRUNSWICK RIVER
BRUNSWICK PT CUT RANGE
CEDAR HAMMOCK RANGE (see tabulation)
JEKYLL ISLAND RANGE
JEKYLL RANGE
Brunswick Pt
Cedar Hammock
Brunswick Creek
Plantation Creek
Clubbs Cr
Marsh
Mud River
Jekyll
BRUNSWICK
LOWER REACH
UPPER REACH
TURTLE RIVER LOWER RANGE
TURNING BASIN
EAST RIVER
Brandy Pt
TANK
TV TOWER
SPIRE
Andrews Is Spit Range
Bridge under construction (see note)
FIXED BRIDGE HOR CL 30 FT VERT CL 10 FT OVHD PWR CAB AUTH CL 35 FT

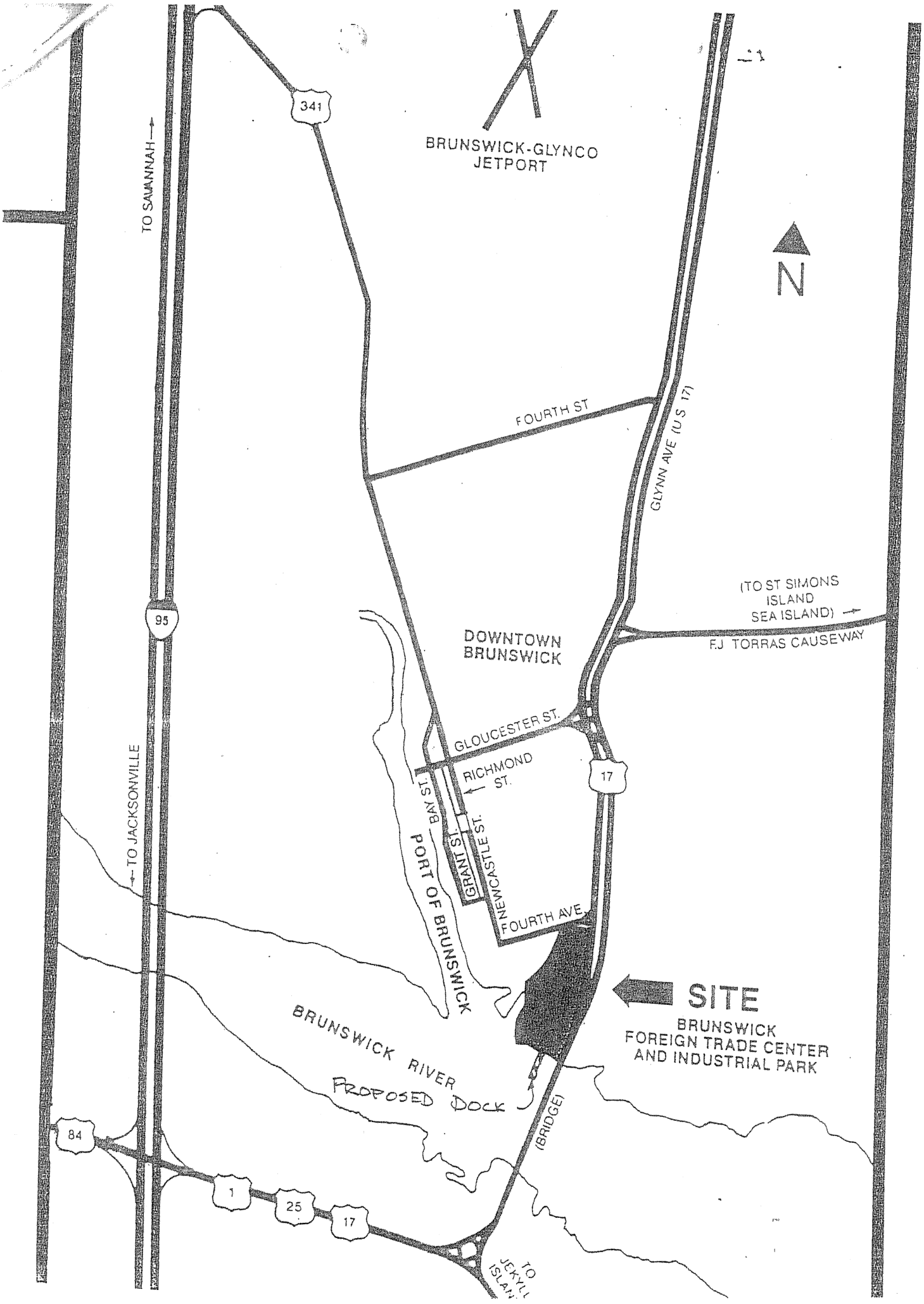
341
BRUNSWICK-GLYNCO
JETPORT
TO SAVANNAH
N
FOURTH ST
GLYNN AVE (U.S. 17)
(TO ST SIMONS
ISLAND
SEA ISLAND)
F.J. TORRAS CAUSEWAY
95
DOWNTOWN
BRUNSWICK
GLOUCESTER ST.
RICHMOND
ST.
17
BAY ST.
GRANT ST.
NEWCASTLE ST.
FOURTH AVE.
TO JACKSONVILLE
PORT OF BRUNSWICK
SITE
BRUNSWICK
FOREIGN TRADE CENTER
AND INDUSTRIAL PARK
BRUNSWICK RIVER
PROPOSED DOCK
(BRIDGE)
84
1
25
17
TO
JEKYLL
ISLAND

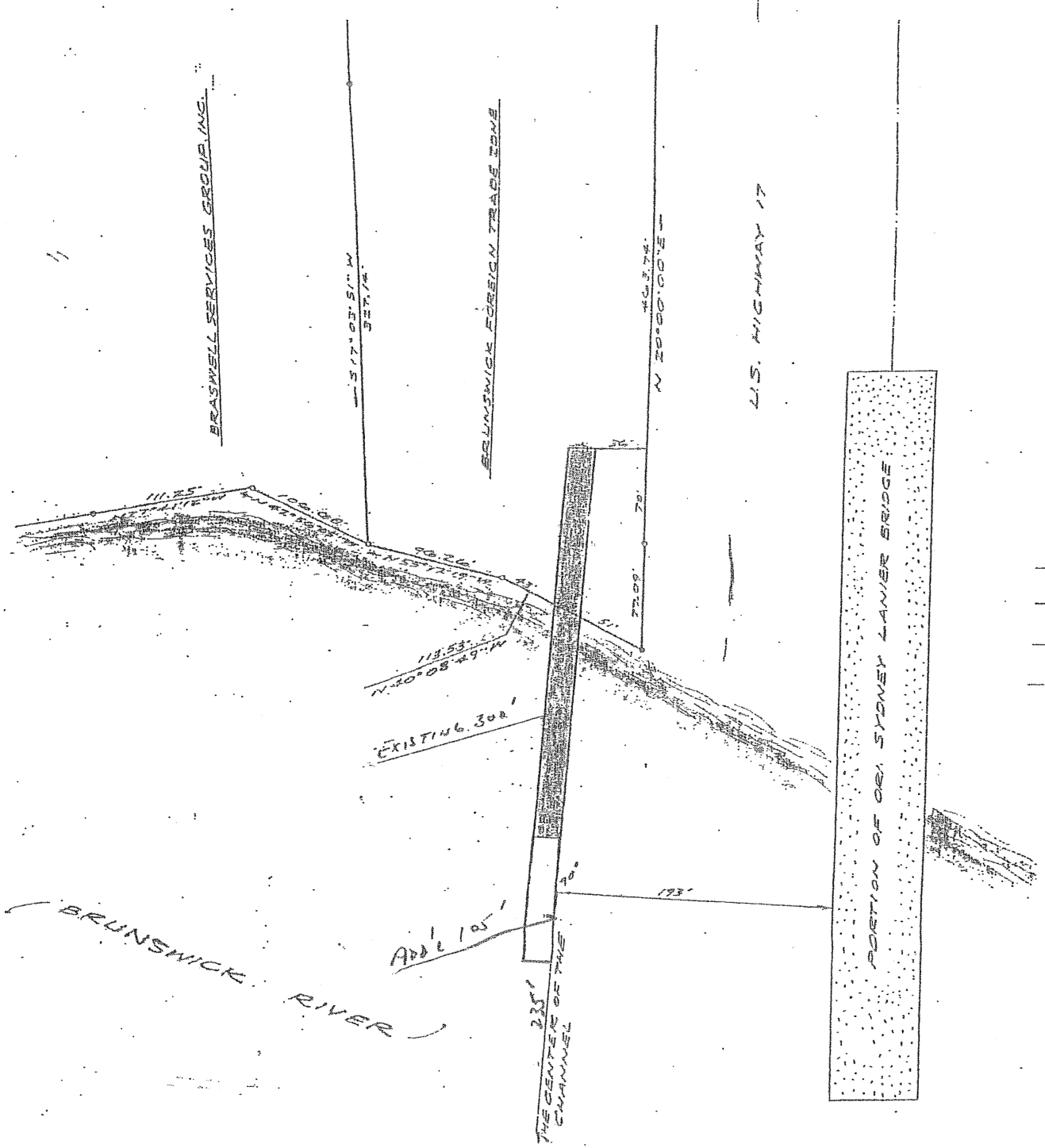

Proposed
DOCK LOCATION

BRUNSWICK FOREIGN TRADE ZONE

CITY OF BRUNSWICK

GLYNN COUNTY, GEORGIA

SCALE 1" = 250'

0 35 50 100 150

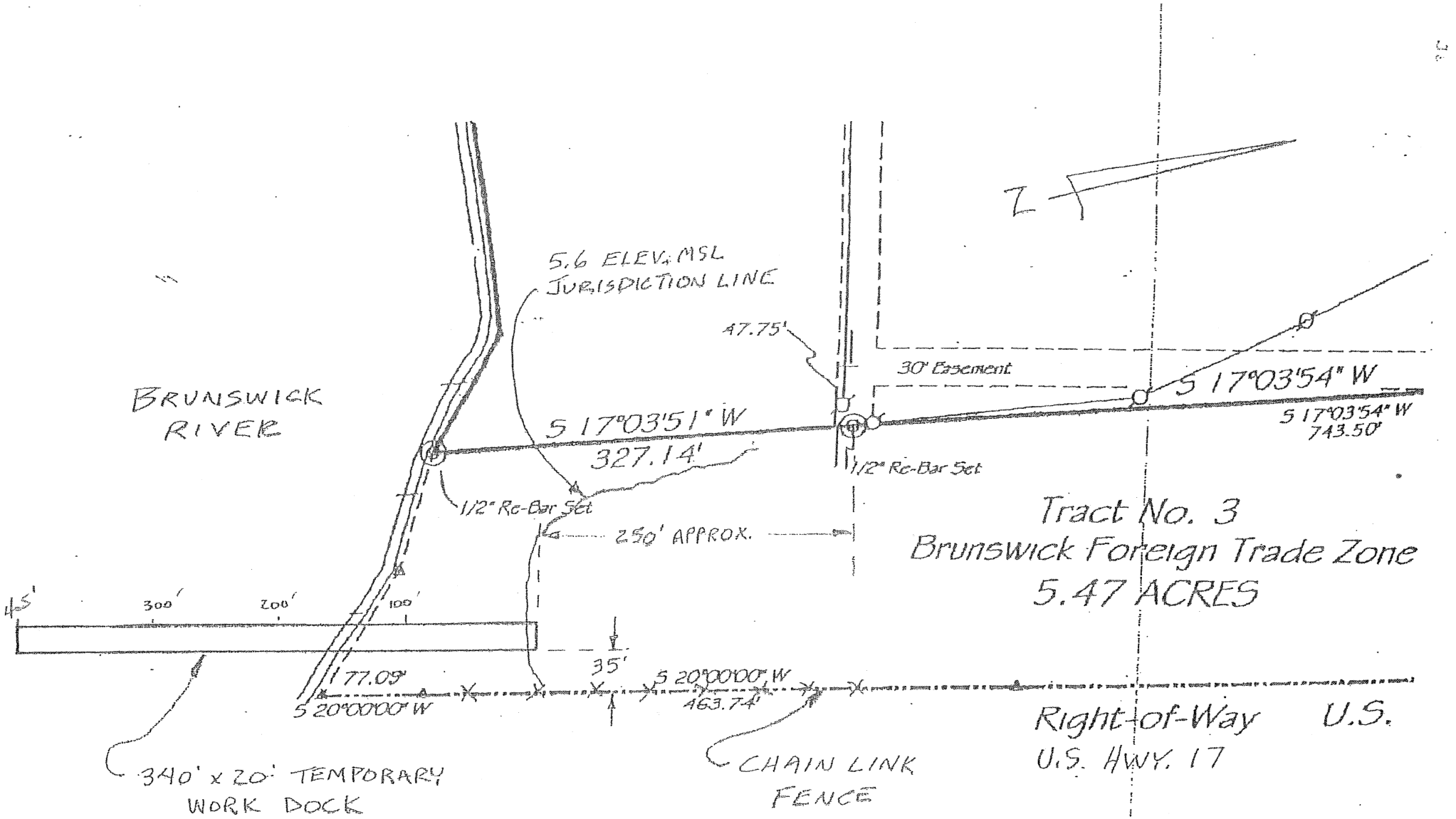

Overhead View and Site Map
For Brunswick Foreign Trade Zone
Proposed Dock

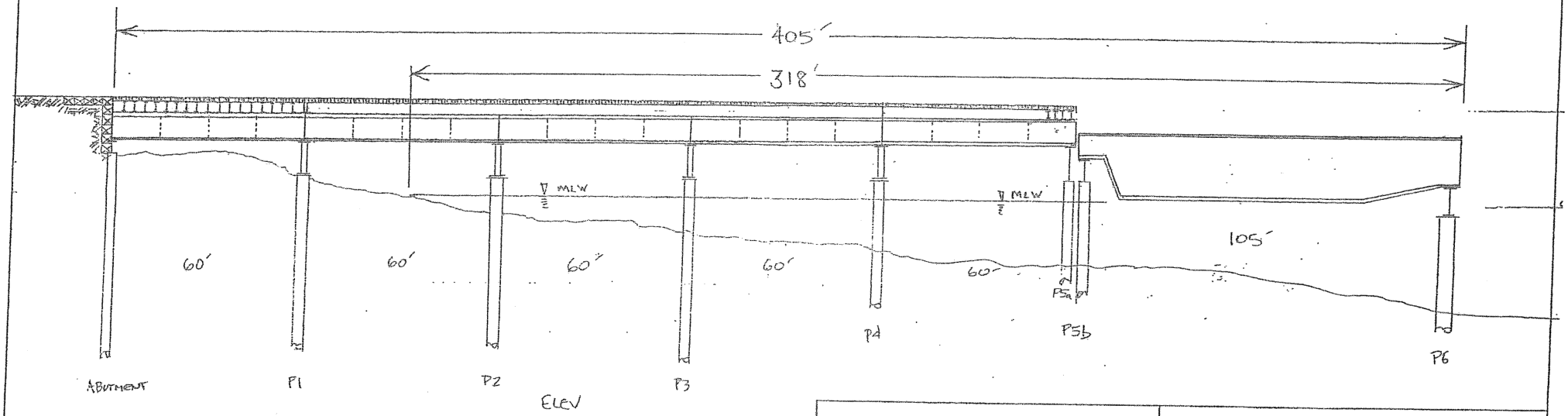

ELEV

Proposed Dock
Brunswick Foreign-Trade Zone

SCOTT BRIDGE COMPANY, INC.
Engineers - Constructors
P.O. Box 2000
Opelika, Alabama 36803-2000
(334) 749-5045
FAX (334) 749-3936

JOB 355 N. Access Bridge
SHEET NO. 1 OF 3
CALCULATED BY CD DATE 12-15-03
CHECKED BY _____ DATE _____
SCALE 1"=30' HORIZ ; 1"=10' VERT

9/29/04

SCOTT BRIDGE COMPANY, INC.
Engineers - Constructors
P.O. Box 2000
Opelika, Alabama 36803-2000
(334) 749-5045
FAX (334) 749-3936

JOB 355
SHEET NO. 1 OF
CALCULATED BY CD DATE 1-20-09
CHECKED BY DATE
SCALE

BRUNSWICK FOREIGN TRADE ZONE - PROPOSED DOCK

N. SIDE ROCK BRIDGE: 90 TON DESIGN TRUCK LOADING

(TRANSVERSE STRINGERS & GRATING NOT SHOWN)

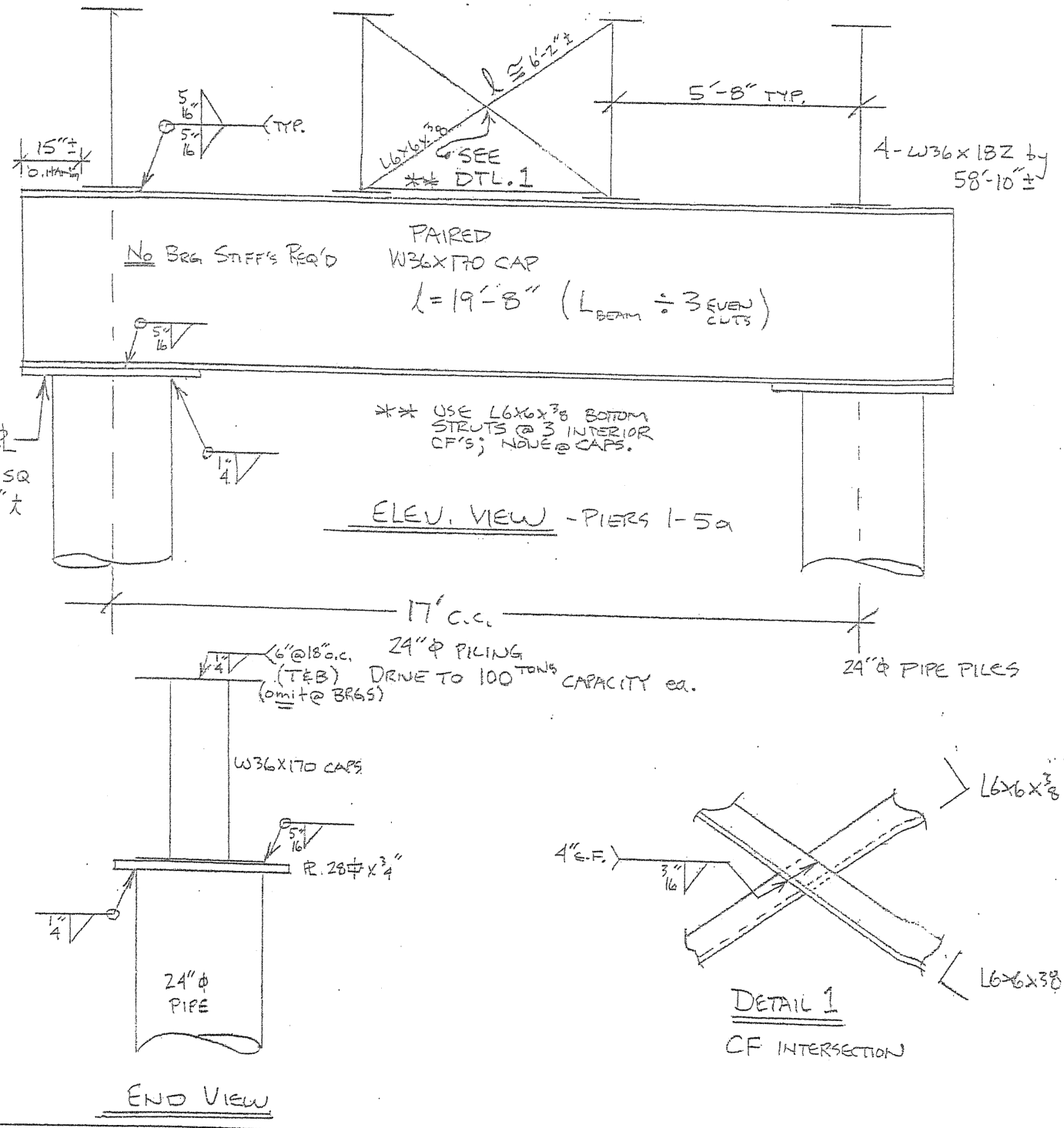

ELEV. VIEW - PIERS 1-5a

END VIEW

DETAIL 1
CF INTERSECTION